RevNo	Revision note	Date	By	Checked
–	–	–	–	–

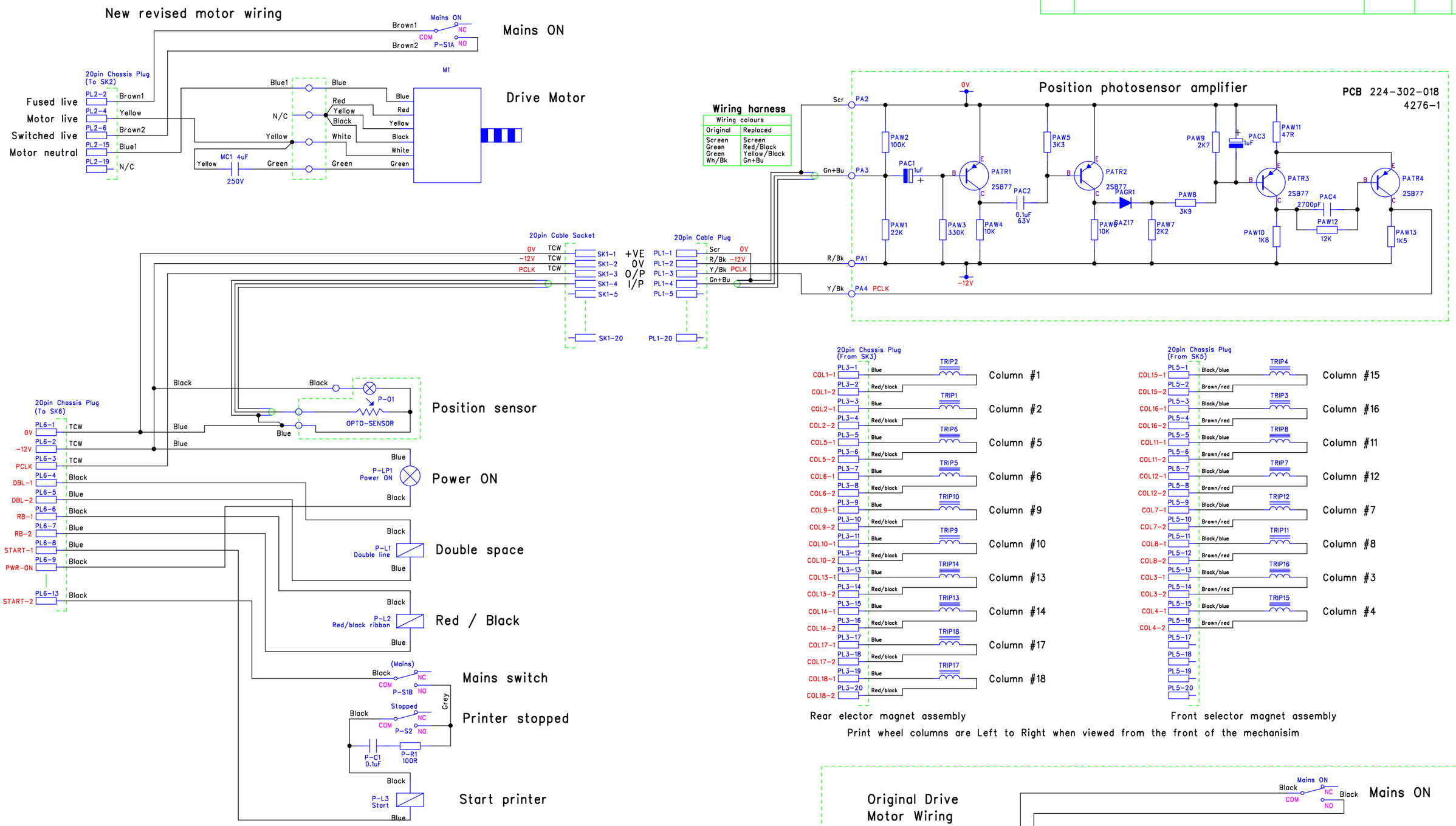

Notes:

DM Associates
33, Northbrook Road
Aldershot, Hampshire. GU11 3HE
Email: mike@soemtron.org
www.soemtron.org

© 2010 Mike Hatch. (www.soemtron.org)

	Name	Date		
Drawn	MD Hatch	19/4/2010	Next Sheet	5
Checked	–	–	Drawing Number	Soemtron 224

Pcb Dwg # =

Scale: Nts

Sheet: 4

Title: Soemtron ETR 224 Calculator Printer Assembly Wiring Circuit Diagram

A2 | Issue A